1862014
Entertainment Cabinet-Chestnut
Parts and Hardware List

A.	Top	1 pc
B.	Bottom	1 pc
C.	Left Side Panel	1 pc
D.	Right Side Panel	1 pc
E.	Left Door	1 pc
F.	Right Door	1 pc
G.	Back Panel	1 pc
H.	Drawer Front Panel	1 pc
I.	Drawer Left Side Panel	1 pc
J.	Drawer Right Side Panel	1 pc
K.	Drawer Back Panel	1 pc
L.	Drawer Bottom Panel	1 pc
M.	Drawer Divider	1 pc
N.	Top Fixed Shelf	1 pc
O.	Middle Shelf	1 pc
P.	Bottom Fixed Shelf	1 pc
Q.	Top Stretcher	1 pc
R.	Bottom Stretcher	1 pc
S.	Door Pulls	2 pcs
T.	Machine Screws	2 pcs
U.	Feet	4 pcs
V.	Connecting Bolts	8 pcs
W.	Eccentric Cams	8 pcs
X.	Plastic Caps	8 pcs
Y.	Allen Head Bolts	10 pcs
Z.	Lock Washers	10 pcs
ZA.	Flat Washers	10 pcs
ZB.	Allen Wrench	1 pc
ZC.	Pan Head Screws	18 pcs
ZD.	Short Phillips Head Screws	12 pcs
ZE.	Long Phillips Head Screws	8 pcs

BOMBAY

1862014
Entertainment Cabinet-Chestnut

ZF.	Confirmat Screws	4 pcs
ZG.	Phillips Head Screwdriver	1 pc
ZH.	Flat Head Screwdriver	1 pc
ZI.	Shelf Supports	4 pcs

∗ Please make sure that you have all the parts and hardware indicated above before you begin assembly of this item.
∗ Use the hardware illustrations to determine correct piece and size.
∗ This item should be assembled on a soft surface to prevent scratching the finish during assembly.
∗ This item may require periodic tightening.
∗ This item is to be assembled by an adult and is not intended to be taken apart by a child.

Hardware Illustrations

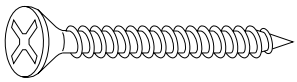

ZE. Long Phillips Head Screw

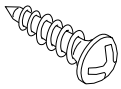

ZC. Pan Head

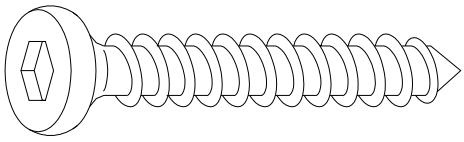

ZF. Confirmat Screw

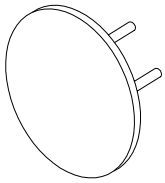

X. Plastic Cap

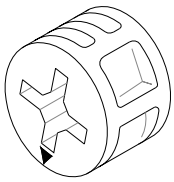

W. Eccentric Cam

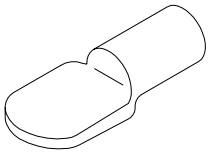

ZI. Shelf Support

V. Connecting Bolt

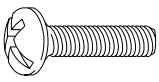

T. Machine Screw

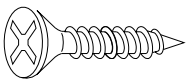

ZD. Short Phillips Head Screw

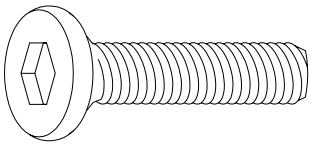

Y. Allen Head Bolt

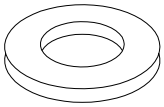

ZA. Flat Washer

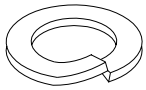

Z. Lock Washer

1862014
Entertainment Cabinet-Chestnut

Assemble Drawer

Parts required

H.	Drawer Front Panel	1 pc	L.	Drawer Bottom Panel	1 pc
I.	Drawer Left Side Panel	1 pc	M.	Drawer Divider	1 pc
J.	Drawer Right Side Panel	1 pc	ZE.	Long Phillips Head Screws	8 pcs
K.	Drawer Back Panel	1 pc	ZG.	Phillips Head Screwdriver	1 pc

1. **Assemble the Drawer.** Insert the dowels in the Drawer Front Panel (H) and Drawer Back Panel (K) into the pre-drilled holes in the Drawer Left Panel (I). Note: grooves of the drawer panels should face inwards and meet. Insert the Drawer Bottom Panel (L) into the grooves of the Drawer Front Panel (H), Drawer Back Panel (K), and Drawer Left Side Panel (I). Insert Long Phillips Head Screws (ZE) through the holes in the Drawer Left Side Panel (I) into the pre-drilled holes in the Drawer Front Panel (H) and Drawer Back Panel (K) and secure using the Phillips Head Screwdriver (ZG). Insert the dowels in the Drawer Front Panel (H) and Drawer Back Panel (K) into the pre-drilled holes in the Drawer Right Side Panel (J). Align the Drawer Right Side Panel (J) to let the Drawer Bottom Panel (L) sit into the groove of the Drawer Right Side Panel (J). Insert Long Phillips Head Screws (ZE) through the holes in the Drawer Right Side Panel (J) into the pre-drilled holes in the Drawer Front Panel (H) and Drawer Back Panel (K) and secure using the Phillips Head Screwdriver (ZG). See Illustration #1.
2. **Attach Drawer Divider (M)** Insert the Drawer Divider (M) into the grooves of the Drawer Front Panel (H) and Drawer Back Panel (K). See Illustration #1.

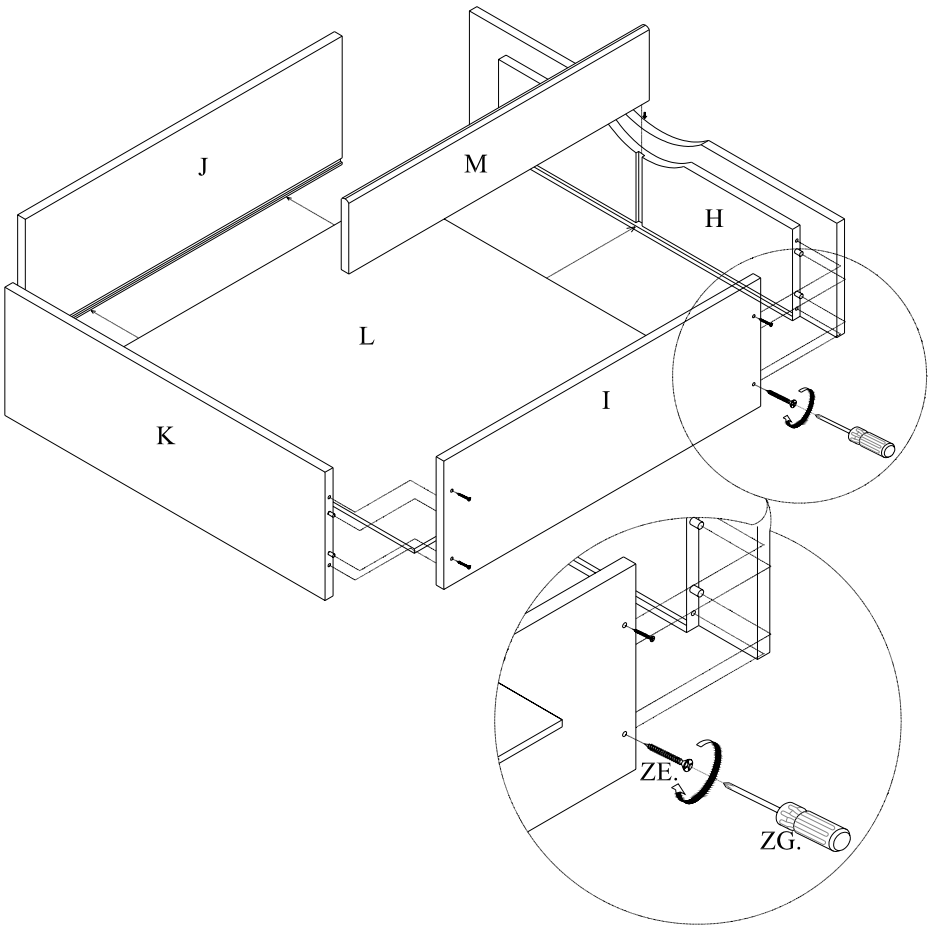

Illustration #1

1862014
Entertainment Cabinet-Chestnut
Attach Shelves and Stretchers
Parts required

C.	Left Side Panel	1 pc	R.	Bottom Stretcher	1 pc
D.	Right Side Panel	1 pc	Y.	Allen Head Bolts	10 pcs
N.	Top Fixed Shelf	1 pc	Z.	Lock Washers	10 pcs
P.	Bottom Fixed Shelf	1 pc	ZA.	Flat Washers	10 pcs
Q.	Top Stretcher	1 pc	ZB.	Allen Wrench	1 pc

3. **Attach Top, Bottom Stretchers (Q,R)** Insert the dowels in the Top Stretcher (Q) into the pre-drilled holes of the Left Side Panel (C) and Right Side Panel (D). Note: the door catch of Top Stretcher (Q) should be towards the bottom of the unit. Secure with Allen Head Bolts (Y), Lock Washers (Z), and Flat Washers (ZA) using Allen Wrench (ZB). Insert the dowels in the Bottom Stretcher (R) into the pre-drilled holes of the Left Side Panel (C) and Right Side Panel (D). See Illustration #2.
4. **Attach Shelves (N,P)** Align the pre-drilled holes in the wood cleats on the bottom of Top Fixed Shelf (N) and Bottom Fixed Shelf (P) with pre-threaded holes in the Left and Right Side Panels (C,D). Secure with Allen Head Bolts (Y), Lock Washers (Z), and Flat Washers (ZA) using Allen Wrench (ZB). See Illustration #2.

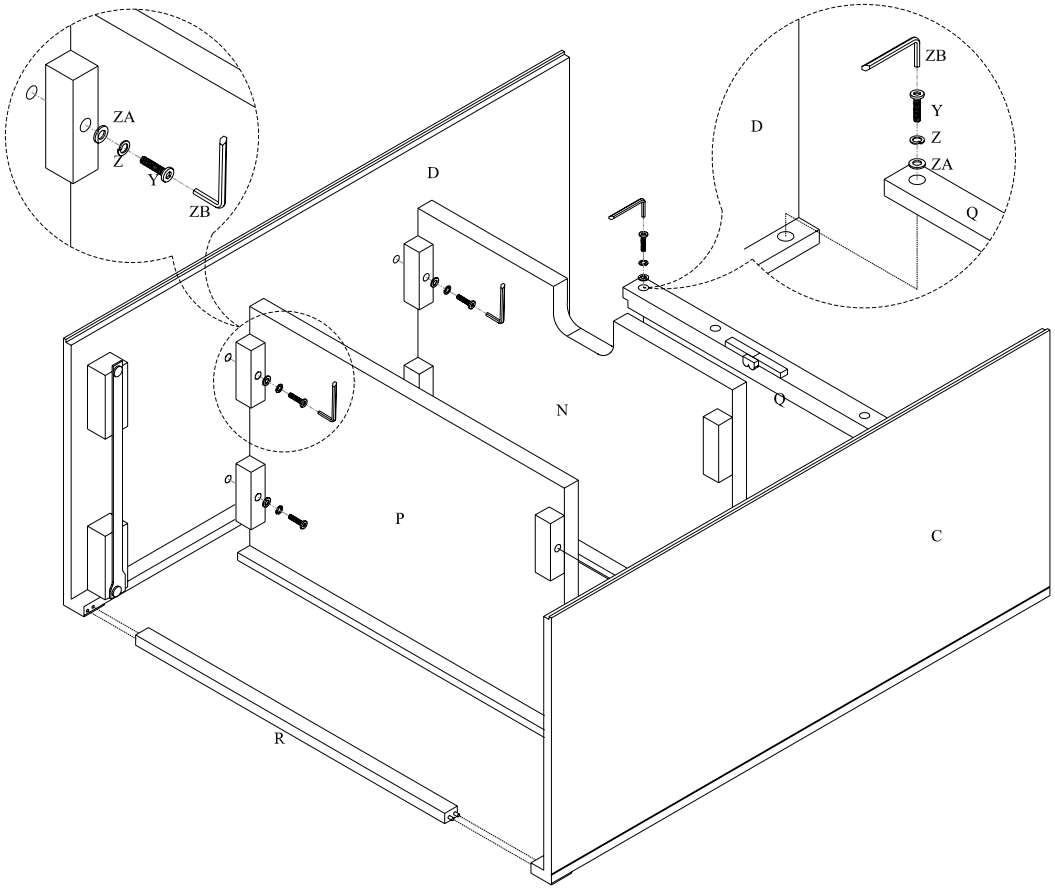

Illustration #2

1862014
Entertainment Cabinet-Chestnut

Attach Top and Bottom with Sides

Parts required

A.	Top	1 pc	R.	Bottom Stretcher	1 pc
B.	Bottom	1 pc	V.	Connecting Bolts	8 pcs
C.	Left Side Panel	1 pc	W.	Eccentric Cams	8 pcs
D.	Right Side Panel	1 pc	X.	Plastic Caps	8 pcs
U.	Feet	4 pcs	ZF.	Confirmat Screws	4 pcs
Q.	Top Stretcher	1 pc	ZH.	Flat Head Screwdriver	1 pc

4. **Insert Connecting Bolts (V)** Insert the Connecting Bolts (V) into the pre-threaded holes in Top (A) and Bottom (B) and secure by using Flat Head Screwdriver (ZH). See Illustration #3.
5. **Attach Top (A), Bottom (B) with Side Panels (C,D)** Align the Connecting Bolts (V) in the Top (A) and Bottom (B) with the pre-drilled holes in the Left Side Panel (C), Right Side Panel (D), Top Stretcher (Q), and Bottom Stretcher (R). Be sure the dowels in the Left Side Panel (C) and Right Side Panel (D) align with the pre-drilled holes in the Top (A) and Bottom (B). Insert the Eccentric Cams (W) into the pre-drilled holes in the Left Side Panel (C), Right Side Panel (D), Top Stretcher (Q), and Bottom Stretcher (R). Make sure the arrows of the Eccentric Cams (W) point towards pre-drilled holes. Use the Flat Head Screwdriver (ZH) to adjust the Eccentric Cams (W) and lock the Connecting Bolts (V) in place by turning in a clockwise direction. Cover the Eccentric Cams (W) with the Plastic Caps (X). Insert the Confirmat Screws (ZF) through the Bottom (B) into the pre-drilled holes in the Left, Right Side Panels (C,D). Tighten using Allen Wrench (ZB). See Illustration #3.
6. **Attach Feet (U)** Insert the exposed threads of the Feet (U) into the pre-threaded holes in the Bottom (B). Secure by turning the Feet (U) in a clockwise direction. Set the cabinet upright. See Illustration #3.

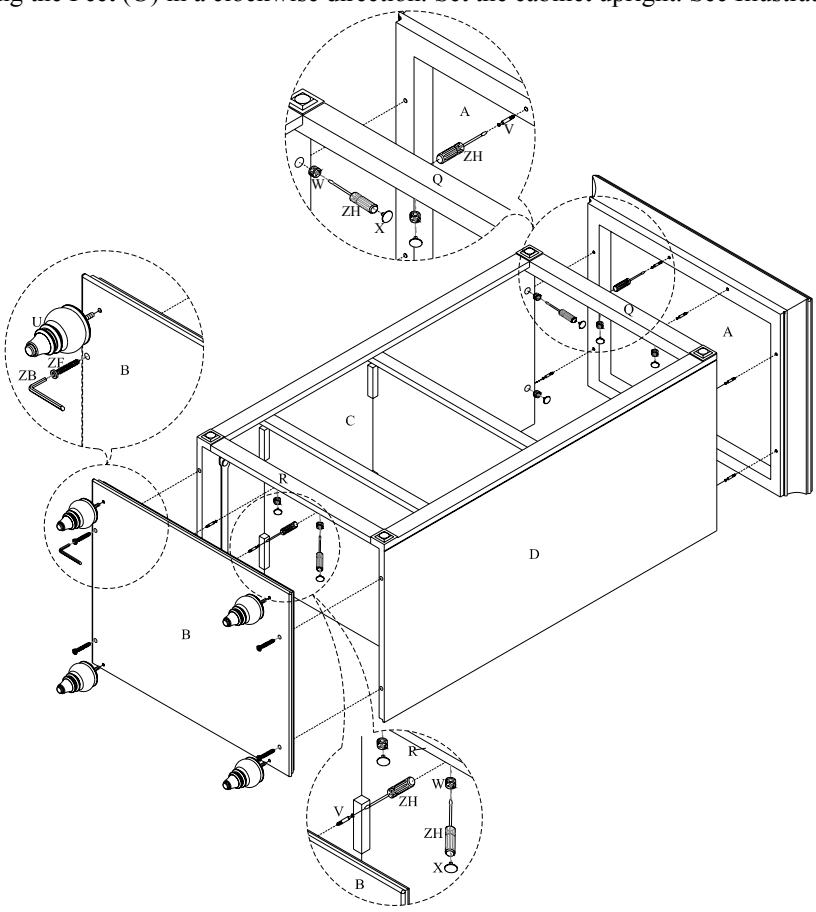

Illustration #3

1862014
Entertainment Cabinet-Chestnut

Attach Back Panel

Parts required

A.	Top	1 pc	G.	Back Panel	1 pc
B.	Bottom	1 pc	ZC.	Pan Head Screws	18 pcs
C.	Left Side Panel	1 pc	ZG.	Phillips Head Screwdriver	1 pc
D.	Right Side Panel	1 pc			

7. **Attach Back Panel (G)** Place the Back Panel (G) in the frame of the Top (A), Bottom (B), Left & Right Side Panels (C,D). Insert the Pan Head Screws (ZC) through the Back Panel (G) and secure into the Top (A), Bottom (B), Left & Right Side Panels (C,D) by using Phillips Head Screwdriver (ZG). See Illustration #4.

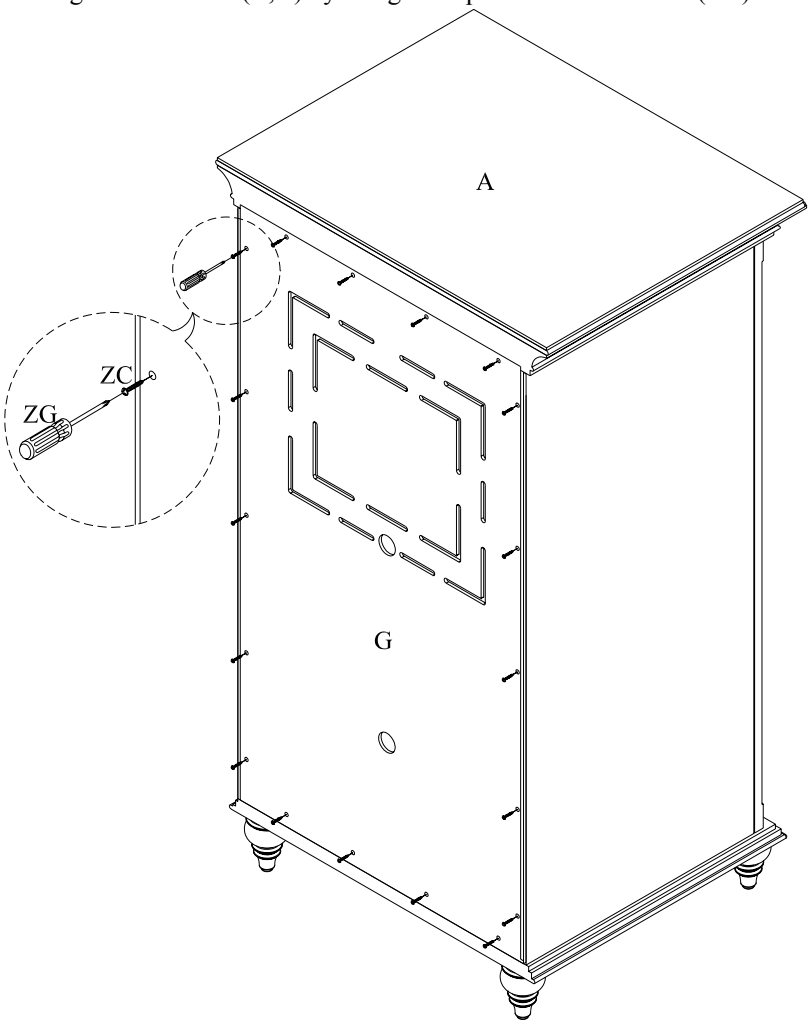

Illustration #4

1862014
Entertainment Cabinet-Chestnut

Attach Doors, Install Drawer & Shelf

Parts required

C.	Left Side Panel	1 pc	T.	Machine Screws	2 pcs
D.	Right Side Panel	1 pc	U.	Feet	4 pcs
E.	Left Door	1 pc	ZD.	Short Phillips Head Screws	12 pcs
F.	Right Door	1 pc	ZG.	Phillips Head Screwdriver	1 pc
O.	Middle Shelf	1 pc	ZI.	Shelf Supports	4 pcs
S.	Door Pulls	2 pcs			

8. **Attach Doors (E,F).** Align the holes in the hinges on the Left, Right Doors (E,F) with the pre-drilled holes in the Left,Right Side Panels (C,D). Insert the Short Phillips Head Screws (ZD) through the hinges and secure to the Left, Right Side Panels (C,D) using Phillips Head Screwdriver (ZG). See Illustration #5.
9. **Attach Door Pulls (S).** Align pre-threaded holes in the Door Pulls (S) with pre-drilled holes in the Left, Right Doors (E,F). Secure with Machine Screws (T) by using Phillips Head Screwdriver (ZG). See Illustration #5.
10. **Install Drawer.** Set the assembled drawer on the glides of the Left, Right Panels (C,D) and slide into cabinet. See Illustration #5.
11. **Install the Middle Shelf(O)** Insert the Shelf Supports (ZI) into desired pre-drilled holes in the Left, Right Side Panels (C,D). Set the Middle Shelf (O) on the the Shelf Supports (ZI). See Illustration #5.

Hanging Devices: If,after assembly,you desire to secure the item to a wall to prevent a hazard to children from tipping over,use the pre-drilled holes in the back top stretcher. Hanging hardware will be needed to secure this item to the wall in your home. Due to the many different types of materials used in home construction you will need to choose an appropriate wall fastener to ensure this item is securely hung. Please consult your local hardware specialist in selecting appropriate hardware and determining proper installation procedures based on your particular needs.

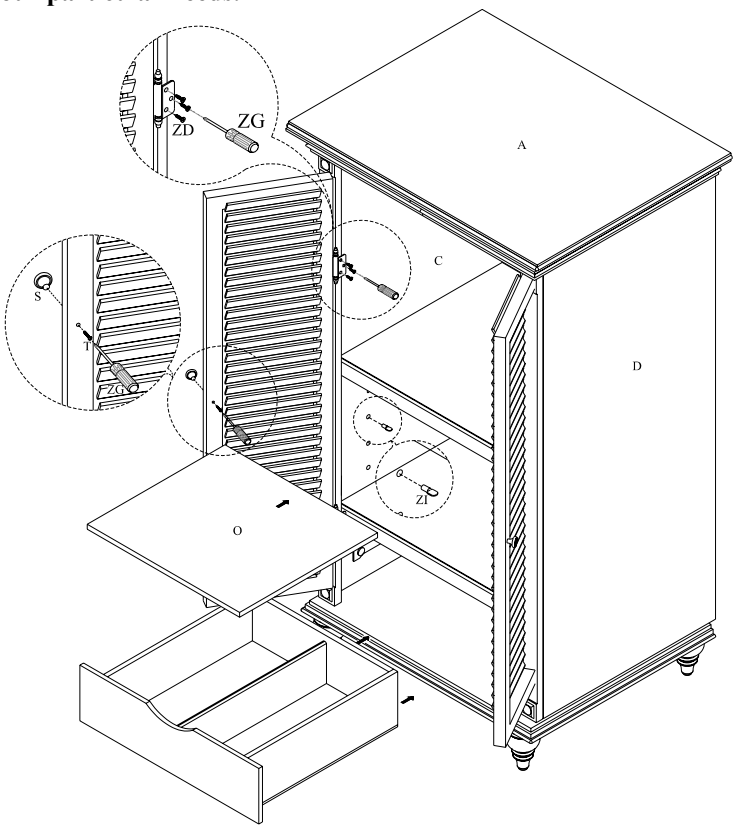

1862014
Entertainment Cabinet-Chestnut

Illustration #5